MEGASTAR CLASS

User manual

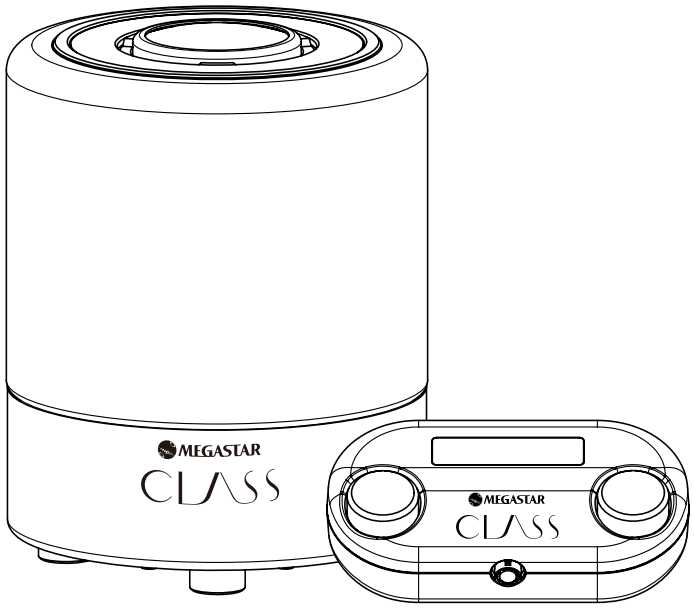

⚠ WARNING

When you handle electronic products, make sure to observe precautions for safety.
Otherwise, fire or an accident resulting in injury may occur.
This user manual shows important precautions to prevent accidents and how to handle the product. Read this manual carefully, and use the product safely.
After reading this manual, be sure to keep this in an easily accessible place.

Ohira Tech Ltd.
4489-1 Ikonobecho, Tsuzukiku, Yokohama City, Kanagawa, 224-0053, Japan
Tel +81-45-507-3531 / Fax +81-45-507-3532
Email class@megastar.jp / Web https://www.megastar.jp/en

Ver. 2.0 (June. 7, 2021)

Contents

1 Introduction 4
1 .1 For Safety 4
1 .1 .1 Handling Precautions 5
1 .1 .2 Safety Precautions 6
1 .1 .3 Consideration for Health 7
1 .2 Main Unit and Major Accessories 8
1 .3 Main specifications 9
1 .4 Warranty 10
1 .5 Identification label and symbols used 10

2 Preparation 11
2 .1 Carrying the Main Unit 11
2 .2 Installation 11
2 .3 Connection 13

3 Basic Usage 15
3 .1 Name of Components 15
3 .2 How to use the Controller 16
3 .3 Turning ON / OFF the power , Standing by 17
3 .4 Focusing the Lens 19
3 .5 How to View the Screen and how the Menu is to be Displayed 19
3 .6 Switching from / to the Menu Screen to / from the Mode Screen 20

4 Menu control 21
4 .1 Menu 21
4 .2 MODE 22
4 .2 .1 Enjoying the stars 22
4 .2 .2 Enjoy the lights 24
4 .2 .3 Getting lights and stars together 25
4 .3 DATE TIME 26
4 .4 TIMER 27
4 .5 SETTING 32
4 .5 .1 TIME 32
4 .5 .2 LOCATION 33
4 .5 .3 SUNSET 34
4 .5 .4 DISPLAY 35
4 .5 .5 BLUETOOTH® 35
4 .5 .6 OFFSET 36

5 Factory settings 37

6 Device service 38
6 .1 Maintenance 38
6 .2 Storage 38
6 .3 Replacing battery 39

7 In case of trouble 40
7 .1 Main device trouble 40
7 .2 Troubles with star projection 41
7 .3 Lights troubles 42
7 .4 Controller troubles 42
7 .5 Bluetooth® troubles 43
7 .6 Misc 44

8 Information on disposal 45

UE Declaration of conformity 46

1 Introduction

1 .1 For Safety

In order to prevent harm to humans such as electric shock or injury or damage to property caused by fire, etc, which may occur when you use the product improperly, make sure to observe the following.

- **Inspect the product regularly.**

  Once every month, inspect the product to confirm that dust does not accumulate between the power plug part and the outlet, that there is no damage to the each cable, that a broken product is not used as it is.

- **Do not use the product if malfunction or abnormal phenomenon (abnormal sound / abnormal smell / smoke) occur.**

  If you notice defective operation, damage, etc, of the main unit or the accessories, immediately turn the power off and contact us.

Our contact information is described on the last page of this manual.

⚠ WARNING

Make sure to observe the matters with this denotation. Otherwise, an unexpected dangerous situation may occur, and as a result, harm leading to serious injury or death may occur.

⚠ CAUTION

Make sure to observe the matters with this denotation. Otherwise, an unexpected dangerous situation may occur, which may cause injury or damage property.

1 .1 .1 Handling Precautions

⚠ WARNING ⚠ CAUTION

- Do not apply an impact to the product.
  - Do not drop the product.
  - Do not place the product in an unstable place.

- Do not place the product in a place where the temperature is likely to become high.
  - Do not place the product in a place where direct rays of the sun may hit.
  - Do not place the product near an object which may become hot.

- Do not place the product near flammable objects.
  - Do not put any foreign objects in the product.
  - Do not cover the lens with flammable objects.

- Do not damage the cable.
  - Insert / pull out the cable by holding the plug part.
  - Before moving the main unit, light up the room and pull out the cable.
  - Use the provided cable.

- Do not use the product in wet places.
  - Do not touch the product with wet hands.
  - Do not use the product in a place with high humidity.
  - Do not use the product without wiping off moisture.
  - Do not put water in the product.

- Do not look into the lens during projection.
- Do not use the product in an unstable place or on your lap.
- Do not place the product near devices which generate strong magnetism such as magnets or motors.
- Do not disassemble or modify the product.
- Do not cover the device with any type of product. (E.g. blanket, clothing or similar)
- Be sure that the ventilation openings are not obstructed during normal operation of the device.

1 .1 .2 Safety Precautions

⚠ WARNING ⚠ CAUTION

- The product is intended to use indoor in private areas. Not for professional use.
- Don’t use the device in a different way it is designed for. The manufacturer is not liable for improper use.
- Packing items should not be left to children as they are potential sources of danger. During use make sure that children do not play with the appliance.
- Use of accessories of third party not recommended by the manufacturer of the appliance may result in fire, electric shock or personal injury.
- Cleaning and maintenance intended to be done by the user should not be carried out by children without supervision.
- This appliance can be used by children aged from 8 years and above and persons with reduced physical, sensory or mental capabilities or lack of experience and knowledge only if they have been given supervision or instruction concerning use of the appliance in a safe way and understand the hazards involved. Children shall not play with the appliance. Cleaning and user maintenance shall
- Not be made by children without supervision.
- The device must only be supplied at safety extra low voltage corresponding to the marking on the appliance. Be sure to use just the external power supply provided in the packaging (model LSU60-108).
- Before connecting the appliance to the power supply, check that the voltage indicated on the technical data corresponds to voltage of the local network and do not use electrical plugs or extensions that are incompatible with informations stated in the technical data.
- If the supply cord or the external power supply is damaged, it must be replaced by the same product available from the manufacturer or its local agent.
- Do not submerge the device in water or other liquids.
- Do not use the appliance with wet hands or bare feet.
- Do not use the appliance if the cord, plug, or some of its parts are damaged.
- Never disconnect the appliance by pulling out the cord.
- After using the appliance, disconnect the cord from the power source and wait for its cooling down before storage or cleaning.
- All repairs, including replacement of the power cord (if any), should only be carried out

by authorized and experienced technicians to prevent any risk.

- Never wrap the power cord around your hand when the appliance is connected to the mains power supply.
- In the case of thunderstorm, disconnect the power cord from the power outlet.
- Keep this User manual for the entire life of the appliance for consultation. If the equipment is sold to a third party, also provide the complete documentation. if some parts are difficult to understand or if there is any doubt in its meaning, contact the manufacturer at the address indicated in the first page or in the section CONTACT of the last page, before starting using the product.
- Connect your appliance with a grounded power outlet. Failure to comply with this requirement can result in an electric shock or serious injury.
- If the power cord is damaged, it must be repaired by the manufacturer or an authorized service center in order to avoid any dangers.
- The light source contained in this luminaire shall only be replaced by the manufacturer or his service agent or a similar qualified person.

1 .1 .3 Consideration for Health

⚠CAUTION

When enjoying with the product, be fully cautious about the following matters.

- Rotation of the starry sky may cause a feeling similar to seasickness. In that case, close your eyes until the rotation stops or set the rotation speed to a slower speed.

- The product emits strong light during the entire projection time. During projection of the starry sky, do not look in the projection lens.

- The lightness of the indoor environmental lighting may change automatically depending on the mode. If you feel uncomfortable, adjust the change. If you do not still feel better, refrain from the use of the mode.

- If you are in poor health or feel uncomfortable, refrain from using for a long time, and use by moderating the rotation speed of the starry sky or the change of lightness.

1 .2 Main Unit and Major Accessories

Before using, confirm that all of the following are provided.

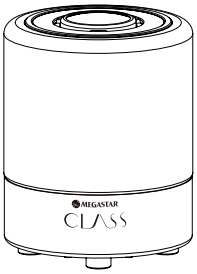

Main Unit

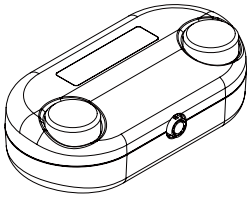

Controller

1 Year Warranty Certificate

Product name : MEGASTAR CLASS

Serial number
Main unit : MCR B
Controller : MCR C

Delivery date (DMY) : / /

Name :
Company :
Address :

Country :
Zip :
Phone :
E-mail :

We would appreciate your comments and requests on the product. The information above is strictly managed and will not be used for any purpose other than the warranty of the product or a serious accident danger etc.

Ohira Tech Ltd.
Tel +81-45-307-3557
10:00 - 18:00 [except for Bat., Sun., public holidays]
e-mail:ohira@megastar.jp
4-889-1, Nomidenko, Tsuzuki-ku, Yokohama City, Kanagawa, 224-0053, Japan

Warranty

User manual

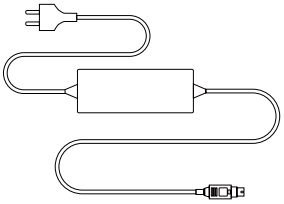

AC Adapter

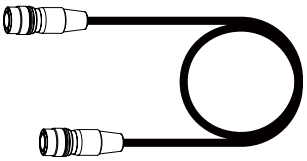

Controller cable

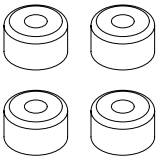

Rubber foot(4pcs)
already attached

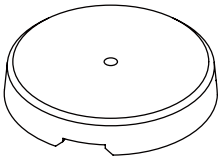

Lens cover

1 .3 Main specifications

Model name	MEGASTAR CLASS
Power supply	100-240 Vac, 1A max, 50-60Hz from external power supply mod. Model : LSU60-108
Input voltage	24Vdc
Input current	1.45A max
Number of projected stars	Over 1 Million
Light source	Ultra bright LED
Lights	RGB Full color LED (twilight, blue sky, and other effects)
Projection area	Up to 3.5m from the device (7m diameter)
Motions	Diurnal motion as for 35 degrees Northern Hemisphere
Optimal projection conditions	Fully dark
Functioning Temperature / Humidity	5~35 deg / max80%
Bluetooth	Version2.1+Enhanced Data Rate(EDR) Class2
Power consumption	35W max(case of AC100 - 240V)
Dimensions Weight	190mm (diameter)×240mm (height) 4kg + controller

Input voltage	5Vdc (Supply from system cable)
Battery type	3Vdc by battery (Only for internal timer) Model : CR2032
Consumption for controller	0.5W (case of AC100 - 240V)

1 .4 Warranty

When the product arrives, enter required matters in the Product Warranty packaged with the product, and send the warranty to us. We will register the product as the object of the product warranty. For the details of warranty, check the Product Warranty. For the serial number of the product, check the product number seals attached to the bottom surface of the main unit and of the controller. During the check, take care not to hit or damage the lens.

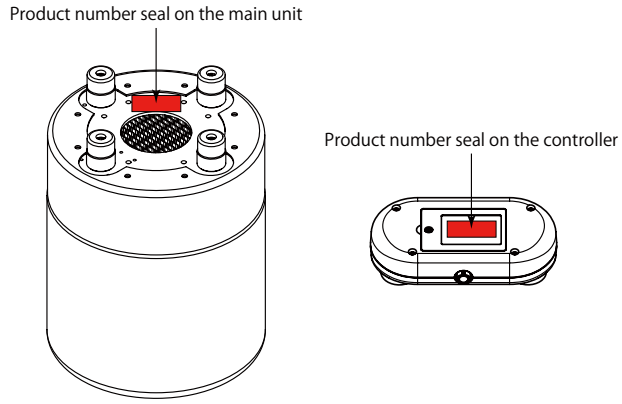

Figure: Check the serial number

1 .5 Identification label and symbols used

Symbols description

CE	CE mark symbol.
	RAEE symbol - indicates that the product,at the end of its use, should not be considered as a normal domestic waste but must instead be disposed in accordance with the law.
	Use of the device indoor only.
	Carefully read the instruction before power on the appliance.
III	Class III appliance.
R 201-125709	Technical mark for specific wireless equipment in Japan.

2 Preparation

2 .1 Carrying the Main Unit

This product is a precision device. When carrying the main unit, turn the power off, pull out the cable, and hold the bottom surface of the main unit with both hands securely. In particular, carrying the main unit in a dark place is dangerous. Make sure to carry the main unit after lighting up the room. Carrying the main unit in an improper way will apply a load to the main unit and will cause damage or malfunction. Be sure to position and install the device prior to power it and before attaching the external power supply.

When carrying the main unit outside, protect the main unit with cushioning and sufficiently take care to not let the product get wet with rain.

2 .2 Installation

- **Installation Environment**

Fix the product on a flat place and use in an environment where you can block out light.

Place for projection	In a fully shaded place and on a wall surface of light color which is near white.
Temperature	5~35 ℃ . 28 ℃ or below is recommended during lighting for a long time which is 1 hour or more.
Humidity	80% at the maximum. (There should be no condensation.)

⚠CAUTION

- Refrain from using near a heater, in a place with high humidity, in a sealed case etc. With no air circulation.
- If you move the product from a cold place to a warm place suddenly, condensation (water drops) may develop on the inside or outside of the product. If condensation occurs, remove the cord and the like, and make sure to wait for water drops to disappear before turning the power on.

- **Fixing method**

On the bottom surface of the product, thread holes for fixing (M5) are provided.
In particular, if you install the product on a place other than a flat stand, use them to fix the product securely. When using the thread holes for fixing, remove the rubber feet fastened with screws in advance.

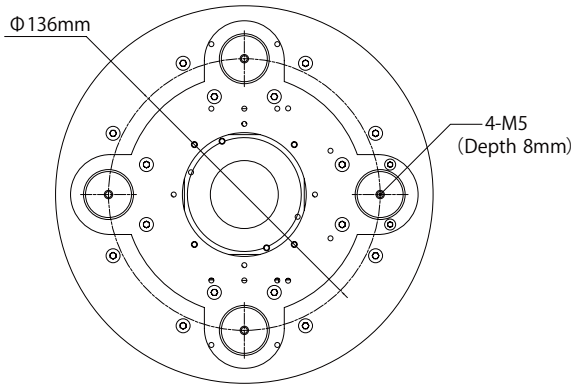

Figure: Fixing screws

⚠CAUTION

If the product is not fixed securely, an accident or malfunction can be caused by dropping, etc.

- **Direction**

With respect to the direction of the starry sky to be projected, the front of the main unit (the direction where the logo can been seen) is “East”. Refer to this when you want to adjust the direction to the actual direction.

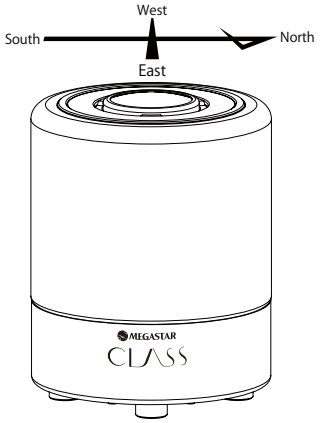

Figure: Sky projection directions

2 .3 Connection

- **How to connect the cable**

1. Connect the cable for the controller to the controller. When connecting the cable, be cautious about the direction of the holes. If they fit properly, the cable will lock automatically.

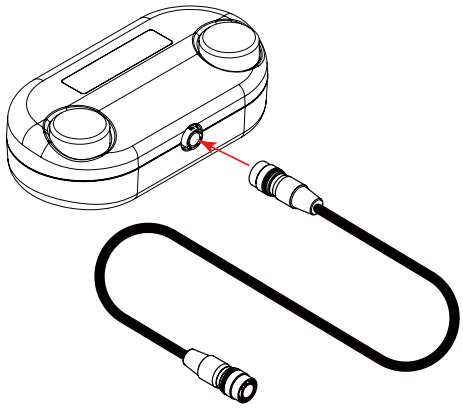

Figure: Connect the controller with its cable

2. Connect the AC adapter output cable and the cable for the controller to the main unit. When connecting the cable, be cautious about the direction of the holes. If they fit properly, the cable will lock automatically.

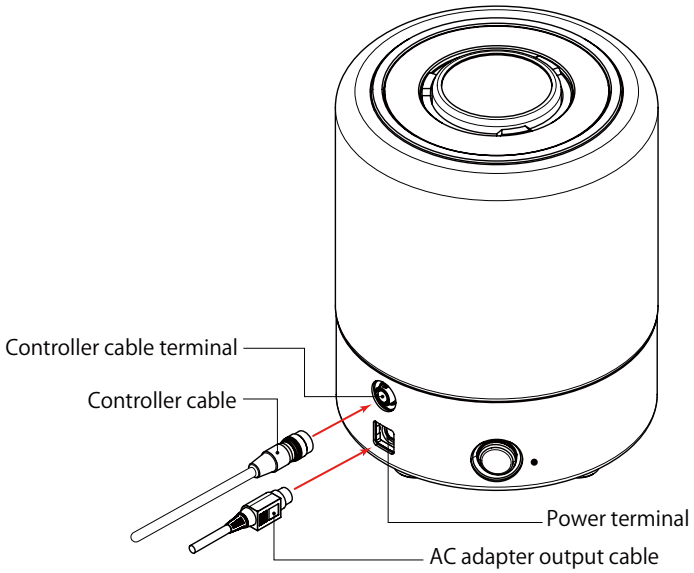

Figure: Connect the cable for the controller and the AC adapter output cable

3. Insert the power plug of the AC adapter into an outlet.

- **How to remove the cable**

A lock is applied to the cable connected to the main unit and the controller in order to prevent them from coming out. Hold the plug part at the head of the cable, and pull it out straight without turning it.

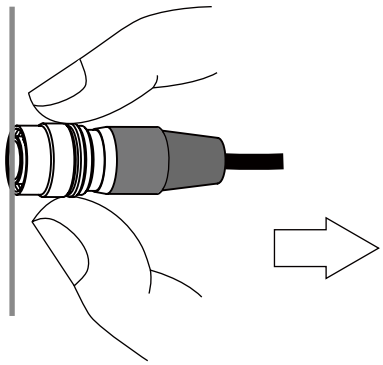

Figure: The cable plug for the controller

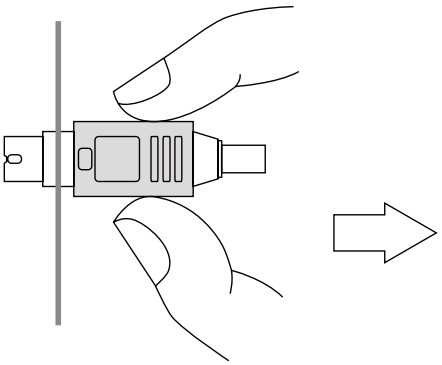

Figure: AC adapter output plug

⚠CAUTION

If you turn or pull the cable, this may cause a malfunction.

3 Basic Usage

3 .1 Name of Components

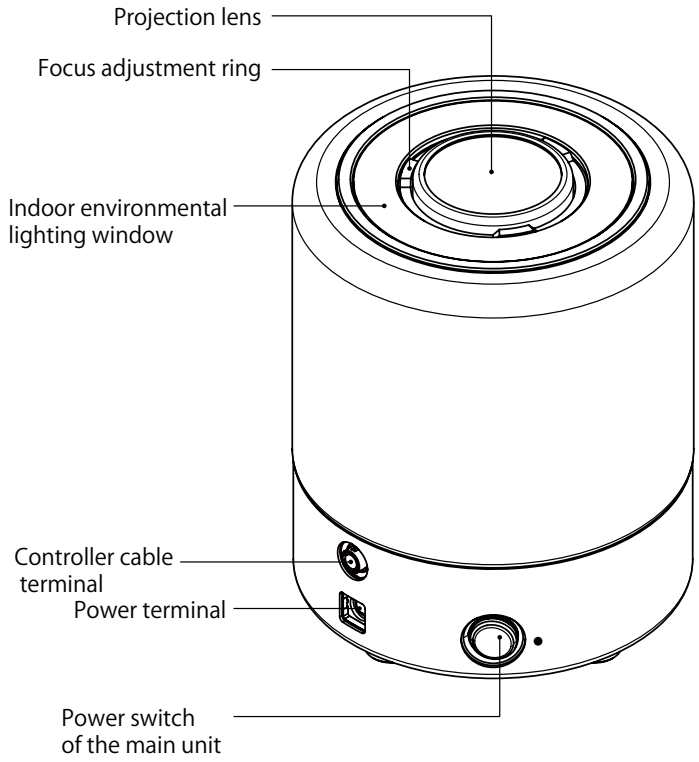

Figure: The component names of the main unit

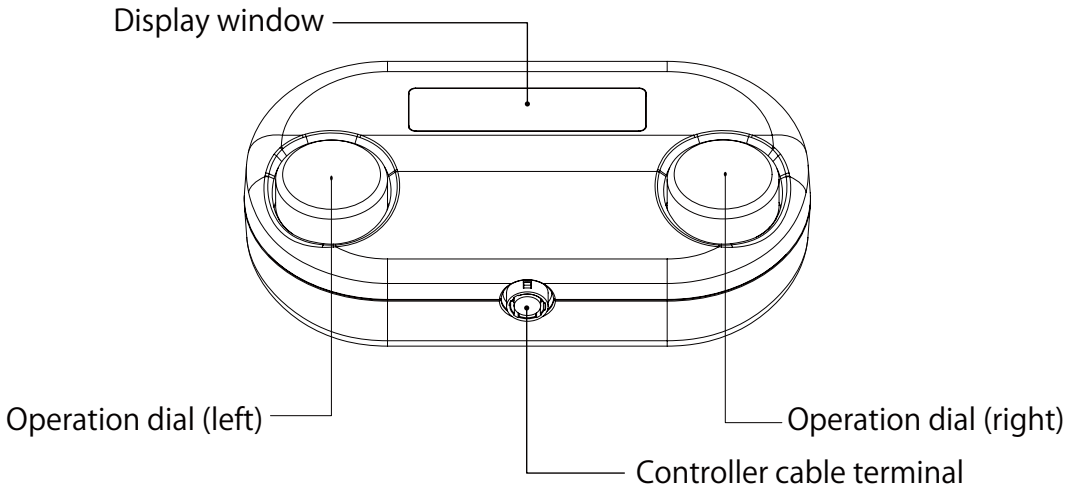

Figure: The component names of the controller

3 .2 How to use the Controller

This product can be operated easily through the use of the provided controller. All operations are to be made with the two dials attached to the right and left of the controller. Each dial has operation functions of “push”, “long push (for about 2 seconds)”, and “rotation”, and the menu and the status of the main unit will be shown on the display.

This manual explains the operations of the controller by using these three kinds of arrows in the following.

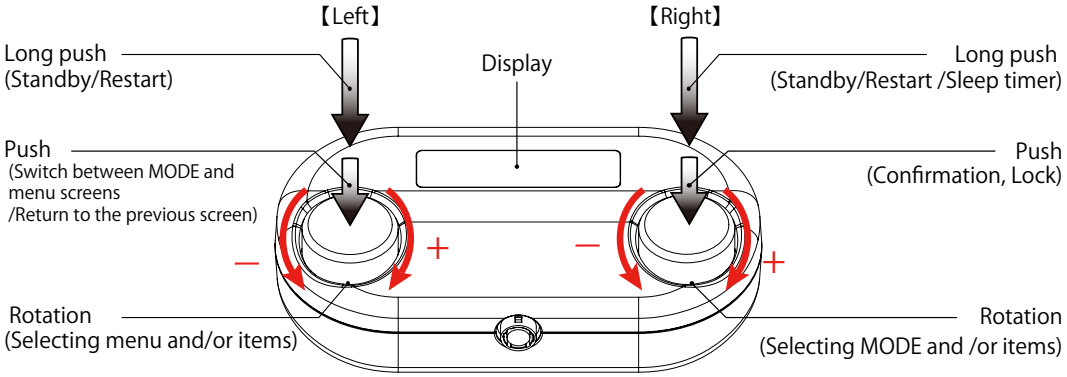

Figure: How to operate the controller

3 .3 Turning ON / OFF the power , Standing by

- **Turning the power on**

When the connecting the controller to the main unit and turning on the main unit, the main unit and controller will be powered on and initialization will start. After the initial operation has been completed and the screen has changed to the mode screen, you can use the product.

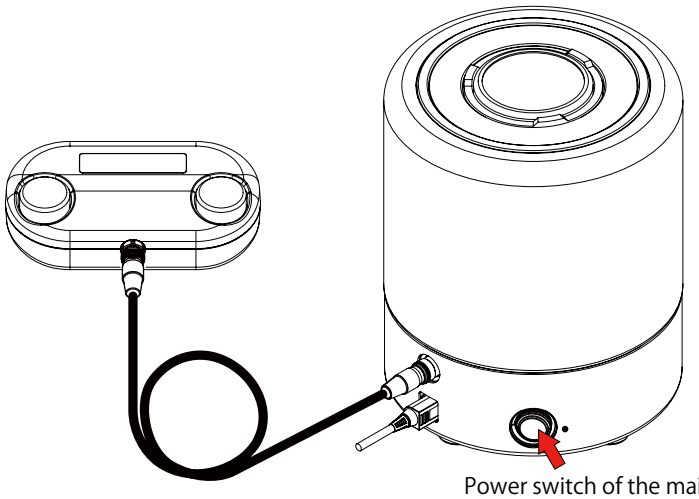

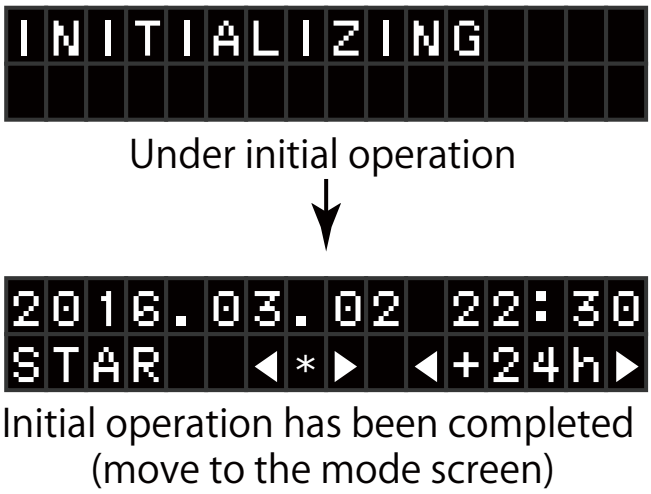

Figure: Turn on the power switch of the main unit

- **Standby / Restart**

If you put the product in standby mode (standby status) without turning off the power, you can shorten the startup time when restarting the product and can use it immediately. In particular, if you use some timers, you are required to put the product in standby mode.
Further, if you put the product in standby mode, it will be able to memorize the status at the time of exit and will reproduce the status at the last time of exit.

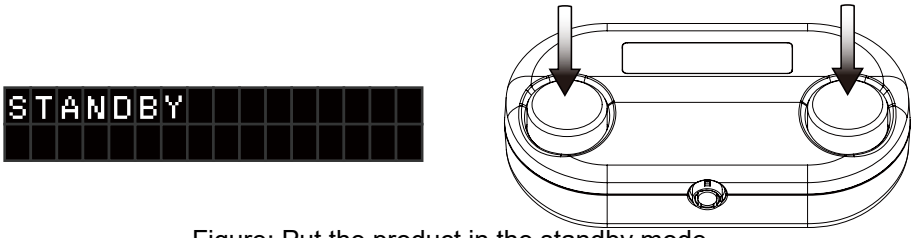

Figure: Put the product in the standby mode

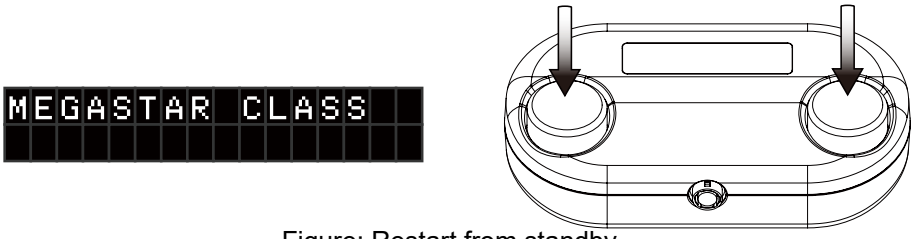

Figure: Restart from standby

- **Turning the power off**

Put the product in standby mode, then, turn off the power switch. (If you turn off the power of the main unit, some timer functions will be disabled.) When main unit is switched off, controller power turns off too. If you are not to use the product for a long time, make sure to pull out the AC adapter from the outlet.

【Attention】
Controller and main unit should be connected by the cable. Otherwise, you cannot control the main unit. Check that controller and main unit are properly connected prior to switching on the main unit power.

3 .4 Focusing the Lens

The focus of the stars is different depending on the place for projection. Adjust the focus of the projection lens so that you can see the stars clearly, watching the projected stars.

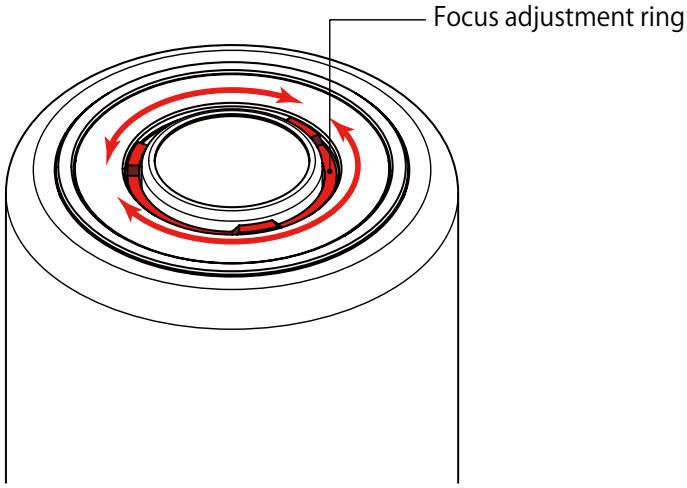

Figure: How to focus the projection lens

⚠ WARNING

When focusing the lens, do not look into it.

3 .5 How to View the Screen and how the Menu is to be Displayed

When you turn on the power, the display shows the current usage mode.
The top of the screen shows the date and time during projection, and the bottom of the screen shows the selected mode. The date and time displayed here is the date and time of the starry sky being projected, and current time is not always displayed.

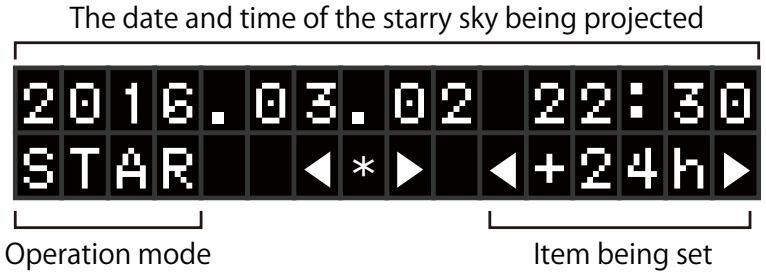

Figure: Display

3 .6 Switching from / to the Menu Screen to / from the Mode Screen

- **Switching from / to the Menu Screen to / from the Mode Screen**

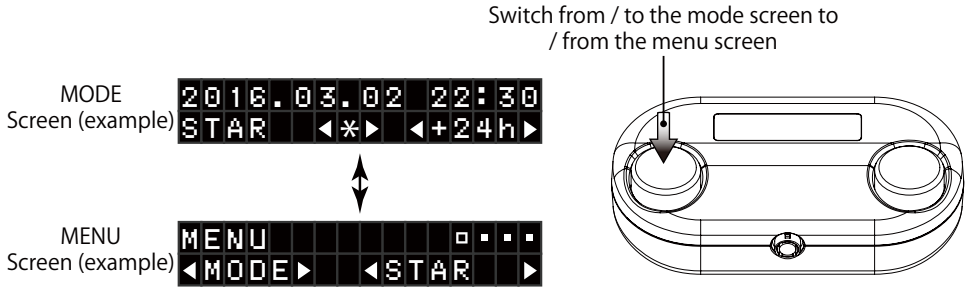

Figure: Switch from / to the mode screen to / from the menu screen

- **Return from the deep level of the menu**

If you are in a deep level of the menu, you can return to the previous menu level by pushing the left dial.

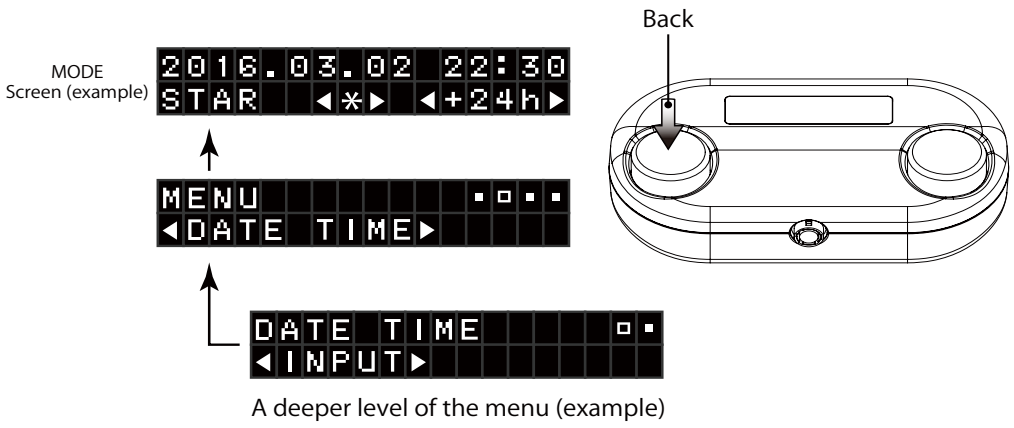

Figure: Return from the menu screen to the mode screen

4 Menu control

4 .1 Menu

MODE : Stars and 5 light modes

- STAR : Planetarium (only stars)
- AUTO : Simulation of full day sky lights.
- FAST : Same as AUTO but day time goes fast.
- RELAX : Relaxation lights
- CANDLE : Simulation of candle lights
- COLOR : Full color light control

DATE : setting the time

- INPUT : Input time value
- SET TO CURRENT : Set time to current time

TIMER : Setting timers

- CHECK : Checking each timer value
- ON TIMER : Setting ON TIMER
- OFF TIMER : Setting OFF TIMER
- WAKE UP TIMER : Setting WAKE UP TIMER
- SLEEP TIMER : Setting SLEEP TIMER

SETTING : All settings

- TIME : Time zone and internal time setting
- LOCATION : Setting observer location
- SUNSET : Selecting sunset pattern
- DISPLAY : Controller Display settings
- BLUETOOTH : Bluetooth® settings
- OFFSET : Setting initial offset value

4 .2 MODE

This device has star mode as well as lights mode. To choose modes, use left dial to get menu MODE, and right dial to choose between modes.

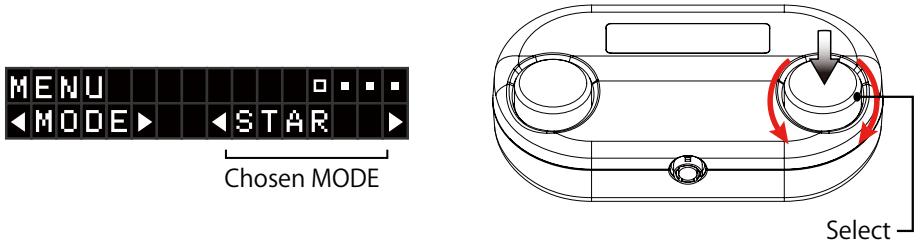

Figure: Choosing MODE

4 .2 .1 Enjoying the stars

- **STAR**

This mode allows you to adjust star brightness and daily speed motion just like in planetariums. You will be able to see the daytime stars too.

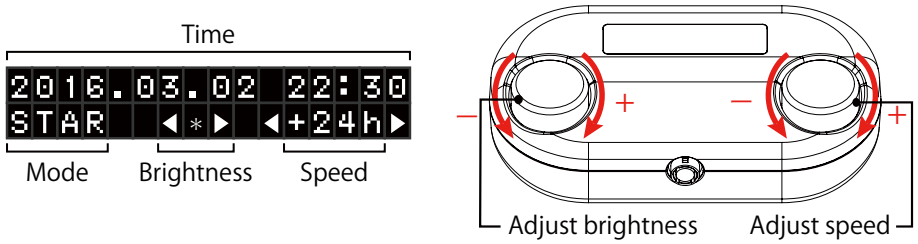

Figure: Star mode (STAR)

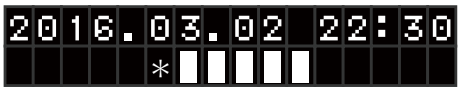

Figure: Adjusting star brightness

Adjusting speed: Time of full rotation, direction.

- STOP : stop daily motion
- Unit (h : hour / m : minute)
- +24h : 24 hours for one full rotation (simulation of real day)

◂◂◂				◂◂			◂	■	▸	▸▸						▸▸▸
−02m	−0.5m	−15m	−30m	−45m	−01h	−02h	−24h	STOP	+24h	+02h	+01h	+45m	+30m	+15m	+05m	+02m

Figure: Adjusting daily speed

- **AUTO**

AUTO mode simulates the stars as well as daily lights, sunset and sunrise lights of the observer location. You can adjust daily motion speed.

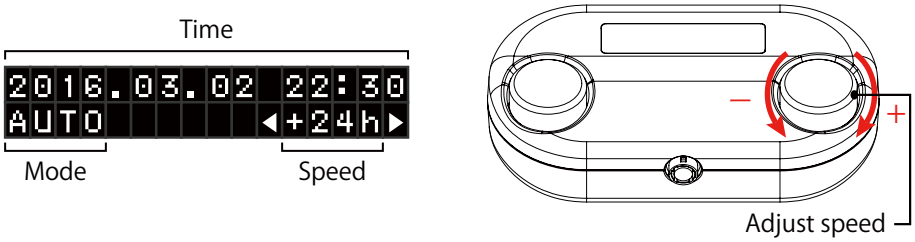

Figure: Auto mode (AUTO)

- **FAST**

AUTO mode has the same features as AUTO mode with the day time automatically moving fast. Thus this mode has increased dark time comparing to auto mode.

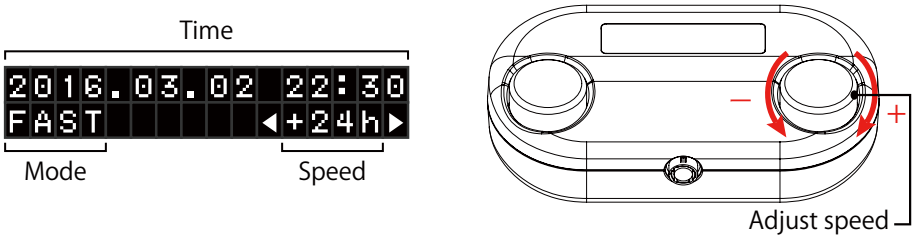

Figure: Fast mode (FAST)

- **Lock feature**

During STAR / AUTO / FAST modes, you can lock / unlock the controller and fix the brightness and speed values.

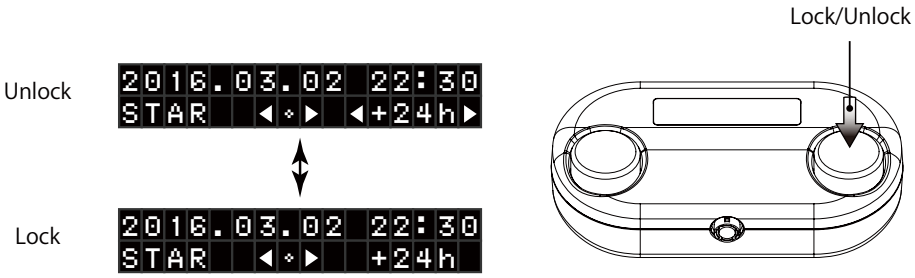

Figure: Lock

4 .2 .2 Enjoy the lights

- **RELAX**

Choose your favorite color and its brightness (LV) and tone (TONE) and enjoy the lights.

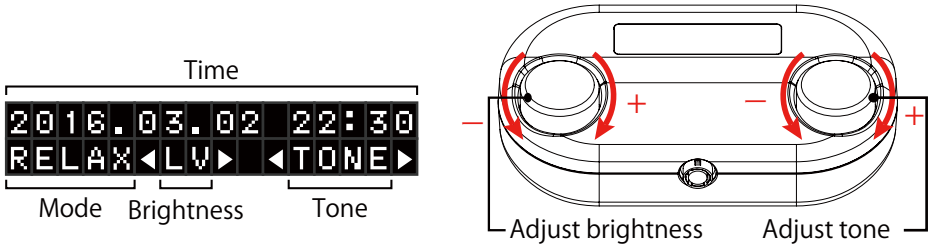

Figure: Relax mode(RELAX)

TONE : When you move the dial to its max position, the tone goes to ROTATION value.

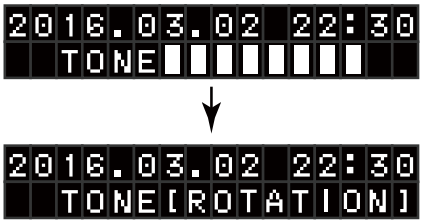

Figure: ROTATION value of TONE

Use COLOR mode for more precise control of lights.

- **CANDLE**

This mode simulates candle light.

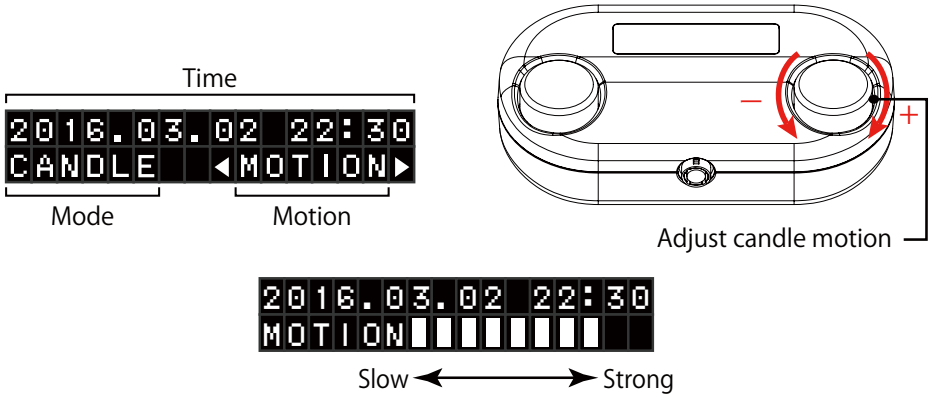

Figure: Candle mode (CANDLE)

⚠CAUTION

• Long time exposing to candle mode can cause bad feeling, In this case, stop the candle mode.

- **COLOR**

You can choose any color.

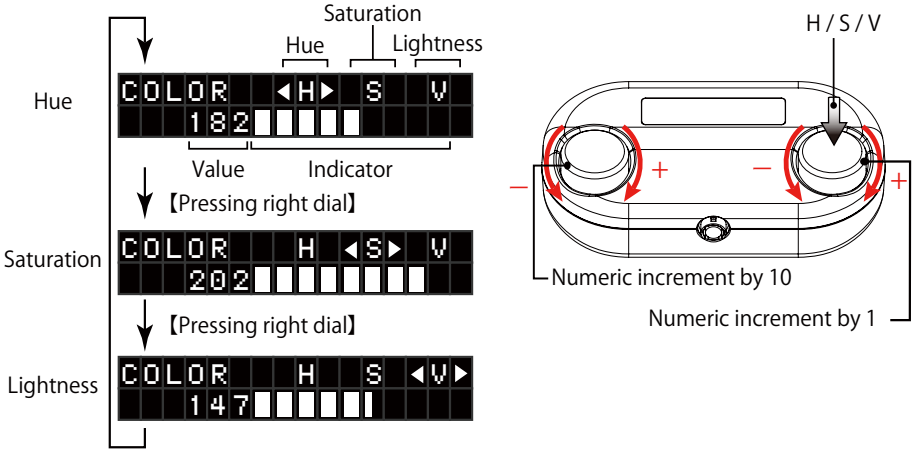

Figure: Color mode (COLOR)

【Settings】

H : Hue value 0 ~ 359

S : Saturation value 0 ~ 255

V : Lightness value 0 ~ 255

4 .2 .3 Getting lights and stars together

With STAR mode you can still choose light colors.

【Steps】

1. In STAR mode, set the star brightness and speed.
2. Choose the color you like from any of the RELAX / CANDLE / COLOR modes.

【Attention】

- In RELAX / CANDLE / COLOR modes, you cannot adjust star brightness and speed. To change these values, you have to go again to STAR mode.
- With light colors, stars might look dim. Adjust the star brightness and colors brightness for a best experience of your environment.

4 .3 DATE TIME

Change the time of projected sky. When the time changes, the visible and invisible stars will be different. This is a real simulation of the night sky according to time and observer location.

【Available modes】STAR / AUTO / FAST

- **INPUT**

Any time can be set. The stars of the selected time will be projected.

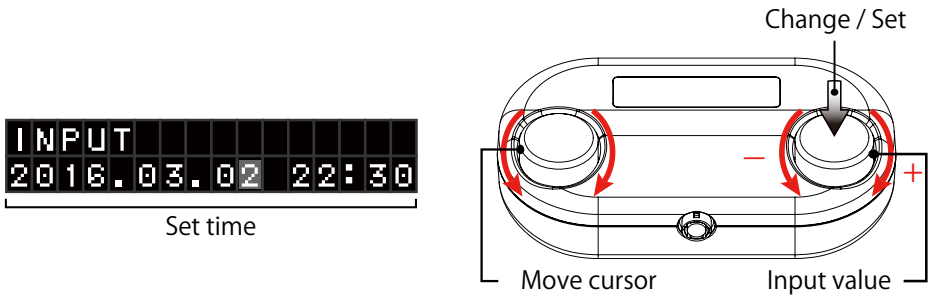

Figure: Setting time

【Configurable time】

Between years : 1900~2099

In case of wrong input (such as February 30th), the screen will flash twice. Check your values, and enter a correct value.

- **SET TO CURRENT**

You can set the time to current time to see the current sky.

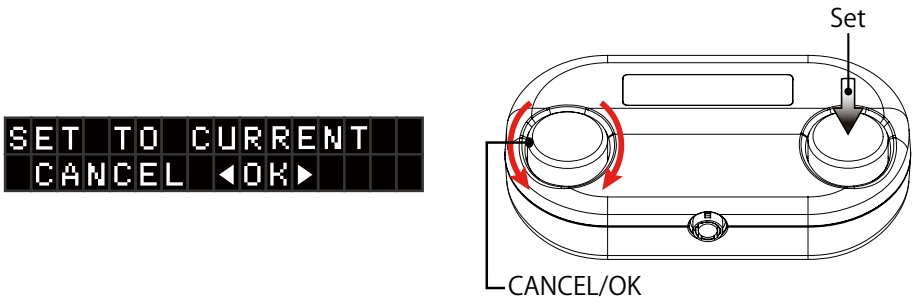

Figure: Set time to current

【Attention】

In case current time is incorrect, you need to set the internal clock of the device.

See clock settings.

4 .4 TIMER

This device has 4 timers : ON TIMER, OFF TIMER, SLEEP TIMER and WAKE UP TIMER.

- **CHECK**

You can check the value of each timer. The screen will display the state of each timer.

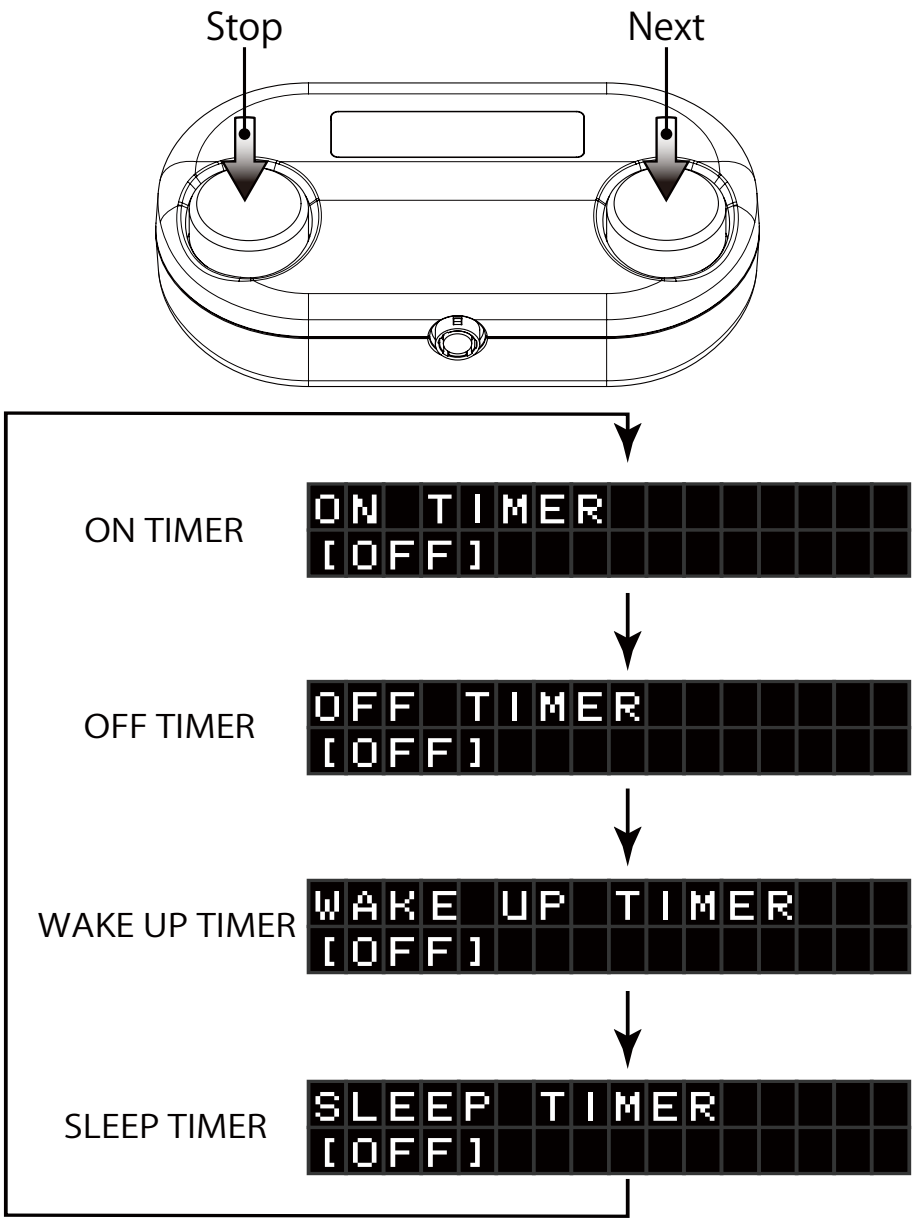

Figure: Timer

- **ON TIMER**

Automatically switches on the device (from standby state). The device will start in the same mode in which it was when was last switched off (to standby state).

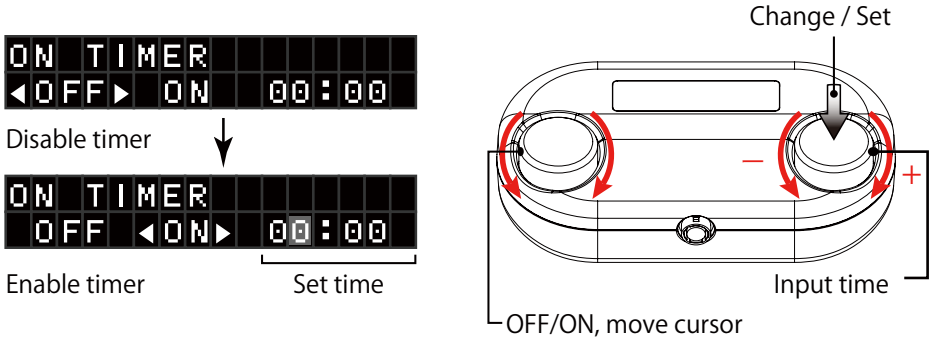

Figure: Setting ONTIMER

After setting the ON TIMER and turning the device to Standby state, it will restart again as per the timer settings.

【Attention】

• If the device power is off, the timer will not work.

• Once the settings is made "ON" the timer will work every morning, until the you set it to "OFF" again.

- **OFF TIMER**

Automatically switches off (to standby state) the device.

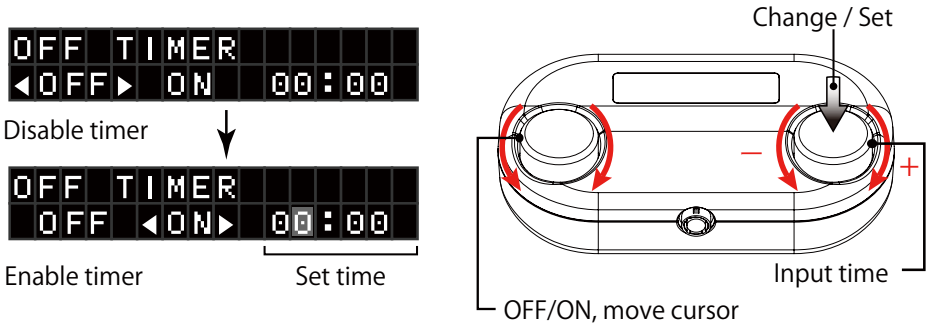

Figure: Setting OFF TIMER

【Attention】

• Once the settings is made "ON" the timer will work every morning, until the you set it to "OFF" again.

- **WAKE UP TIMER**

The device starts a slow fade-in for lights simulating sunrise.

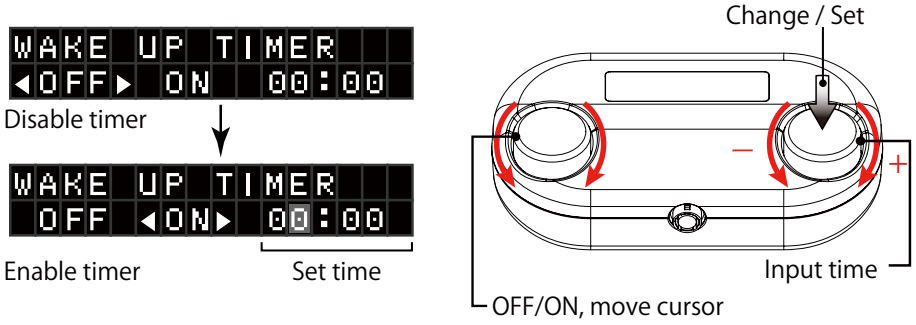

Figure: Setting Wake Up Timer

After setting the WAKE UP TIMER and turning the device to Standby state, it will restart again as per the timer settings.

To stop the timer action, press any of the dials.

Figure: Example of WAKE UP TIMER

【Attention】

- Once the settings is made "ON" the timer will work every morning, until the you set it to "OFF" again.

- **SLEEP TIMER**

Once this timer is enabled, the device will go to standby state after specific set time.

NORMAL : Once the Sleep time comes, the devices goes to standby state.

STAR : Automatically slowly turns on the lights from evening sunset to night stars only. Once the Sleep time comes, the devices goes to standby state.

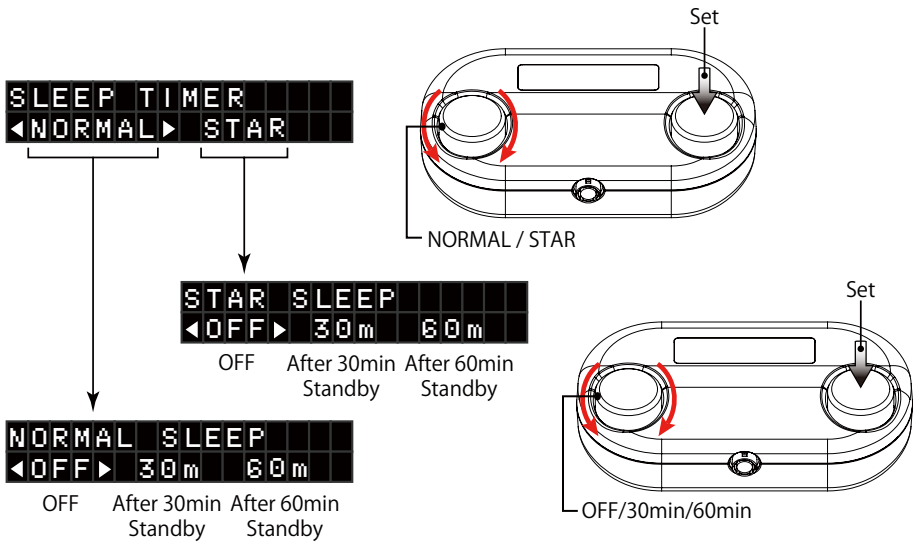

Figure: Setting SLEEP TIMER

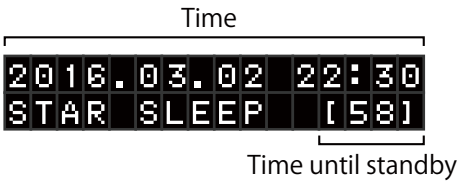

Figure: ”STAR SLEEP” Display

【SLEEP TIMER settings】

Available values: After 30min and 60min

Once enabled, choose the "OFF" to disable the timer.

【Attention】

• Once STAR SLEEP mode is enabled, you cannot control any of the menus except TIMER, SETTING.

- **Shortcut to SLEEP TIMER**

Long press of the right dial is a shortcut to the SLEEP TIMER menu.

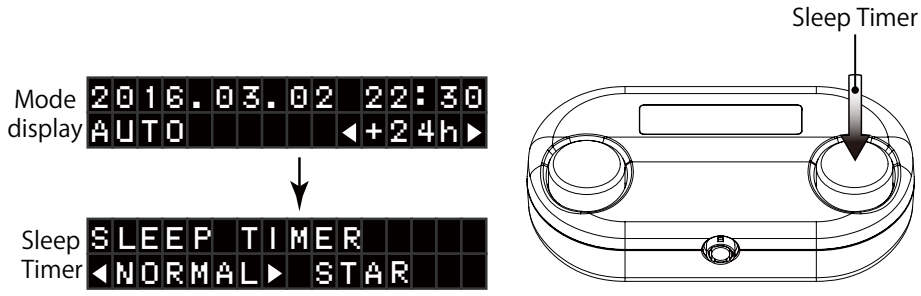

Figure: Shortcut to SLEEP TIMER

4 .5 SETTING

SETTING is the menu for all settings of the device or its controller.

4 .5 .1 TIME

- **TIME ZONE**

Setting the time zone. (This related to the internal clock.)

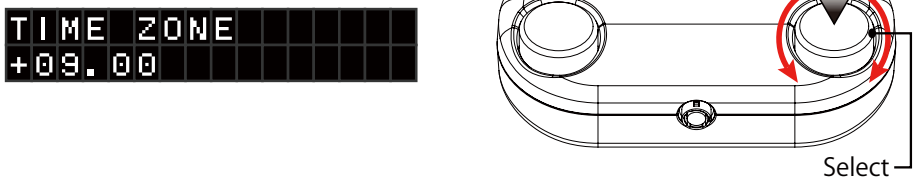

Figure: Timezone setting

Default value : +09.00 (JPT time zone)

- **CLOCK**

Setting the internal clock time. Set this time to your current actual time.

In case of wrong input (such as February 30th), the screen will flash twice. Check your values, and enter a correct value.

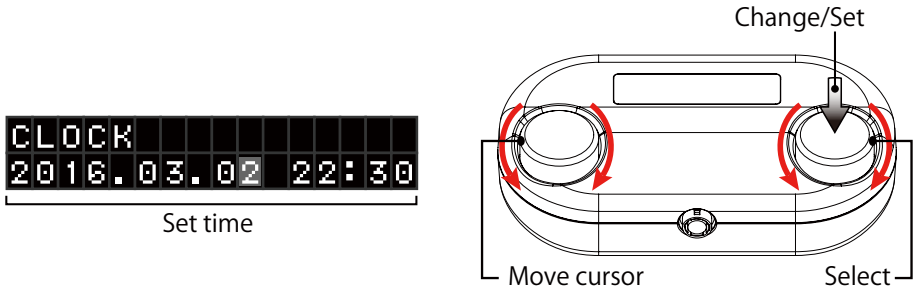

Figure: Setting internal clock

Configurable time : Between years 1900~2099

【Attention】

• In case internal clock time does not set correctly, try replacing the battery of the controller might need replacement.

4 .5 .2 LOCATION

- **CITY LIST**

By selecting the closest city in northern latitude to your location, the sunset and sunrise time will be most accurate.

Default value: Akashi (Japan)

- List of cities in Japan

Tokyo / Shizuoka / Nagoya / Osaka / Akashi / Hiroshima / Yamaguchi / Fukuoka

- World cities

Seoul / Xian / Tehran / Jerusalem / Athens / Malta / Lisbon / Washington DC / Atlanta / Los Angeles

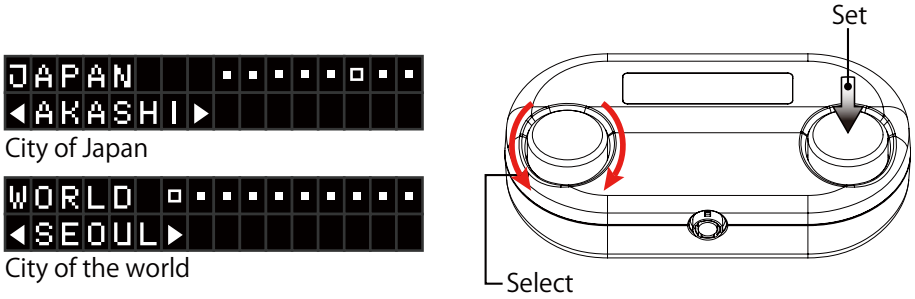

Figure: Selecting city

• You have to set the time zone manually for your location.

• For a more precision on the location, you can set the longitude.

- **LONGITUDE**

You can set exact value for the longitude for a better accuracy of the observe location.

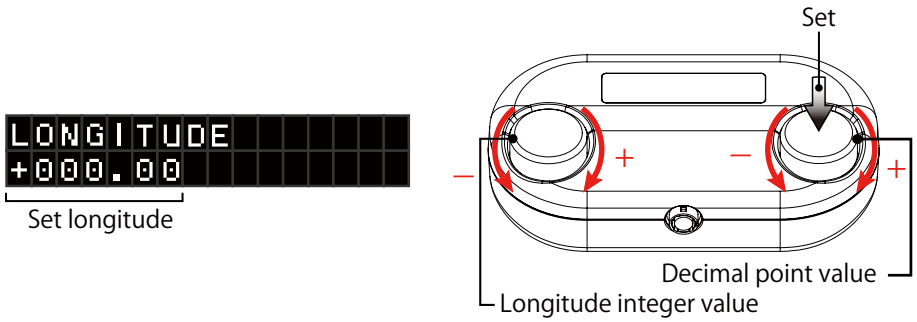

Figure: Setting longitude

+: For Eastward

–: For Westward

• By rotating the right dial, you can set the longitude value after the decimal point.

【Attention】

• You have the manually set the correct time zone for the location that you set in longitude.

4 .5 .3 SUNSET

In AUTO / FAST modes, you can select the duration of the twilight colors.

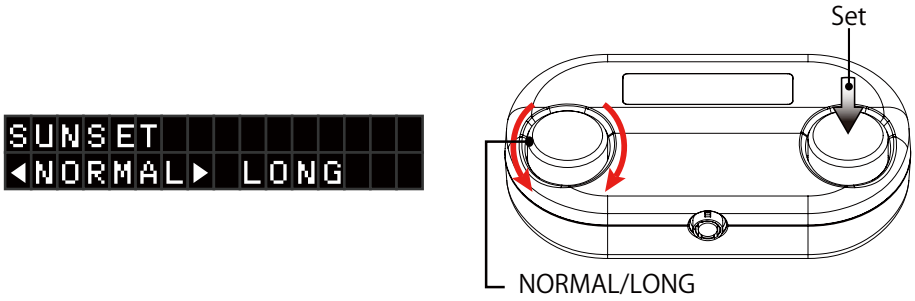

Figure: Choosing twilight color duration

NORMAL : Default value

LONG : Longer duration than NORMAL

4 .5 .4 DISPLAY

Time until controller display light turns off.

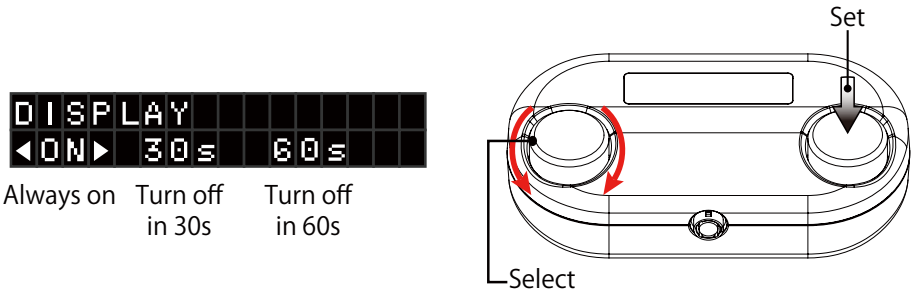

Figure: Setting the controller display light duration

Available values: 30 seconds and 60 seconds

4 .5 .5 BLUETOOTH®

To control this device remotely (via your android smart phone) you should enable Bluetooth on your smart phone.

Download the application MEGASTAR CLASS CONTROLLER from Google Play store. Megastar Class should appear in the devices list in the controller application. This allow you to control your device. For detailed control, please refer to the application.

Below are description on how to make your device visible via Bluetooth and configure it.

- **OFF / ON**

Turns ON / OFF Bluetooth function.

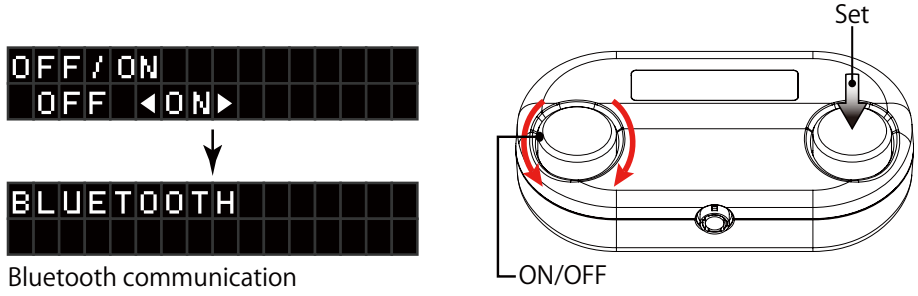

Figure: Setting Bluetooth ON / OFF

【Attention】

- When controlling the device via Bluetooth, the controller should be connected to the main unit.
- When Bluetooth is set to ON, all menus except Settings will be disabled. To use these functions, turn Bluetooth OFF again.

- **NAME**

Device name. You can change the default name of the device.

Default name : CLASS"000"

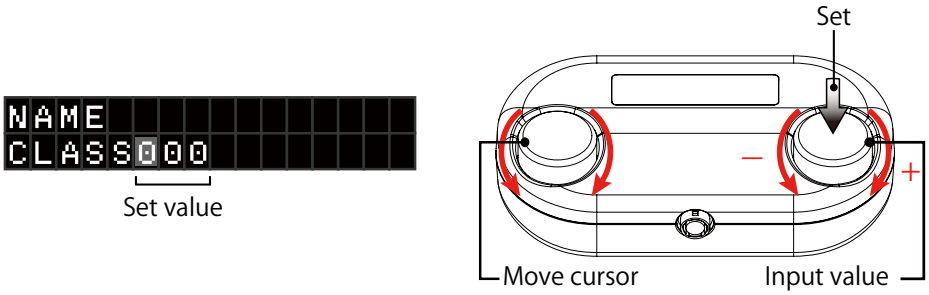

Figure: Setting device name

- **PIN CODE**

Pairing pincode for Bluetooth connection.

Default value is: 12345678

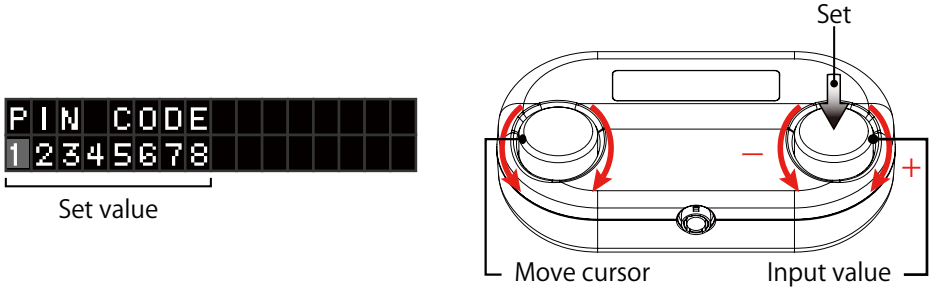

Figure: Setting pin code

4 .5 .6 OFFSET

Enables setting rotation value for the internal star plate in case there is offset between the expected star field and time.

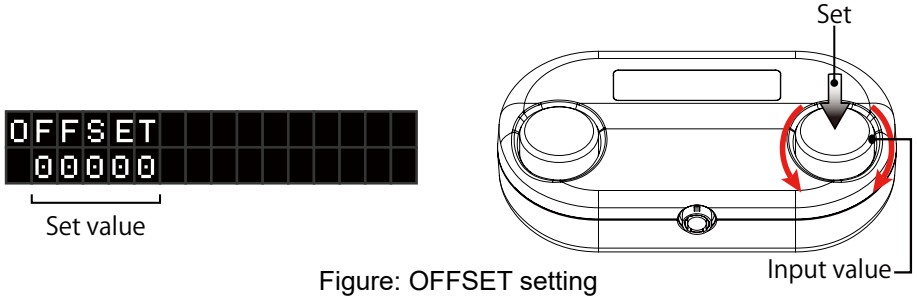

Figure: OFFSET setting

Default value : 00000

Rotation unit : Each value of 1 unit equally to 0.003472 degrees

5 Factory settings

Resetting the device into factory settings will erase your settings and time, and bring the device back to its original settings.
To do so, first fully switch off the device. Press and keep pressing both dials on the controller, and switch on the power of the unit while keep pressing the dials. A confirmation menu appears.

Once reset is done, the device will restart. Set the clock and other settings manually.

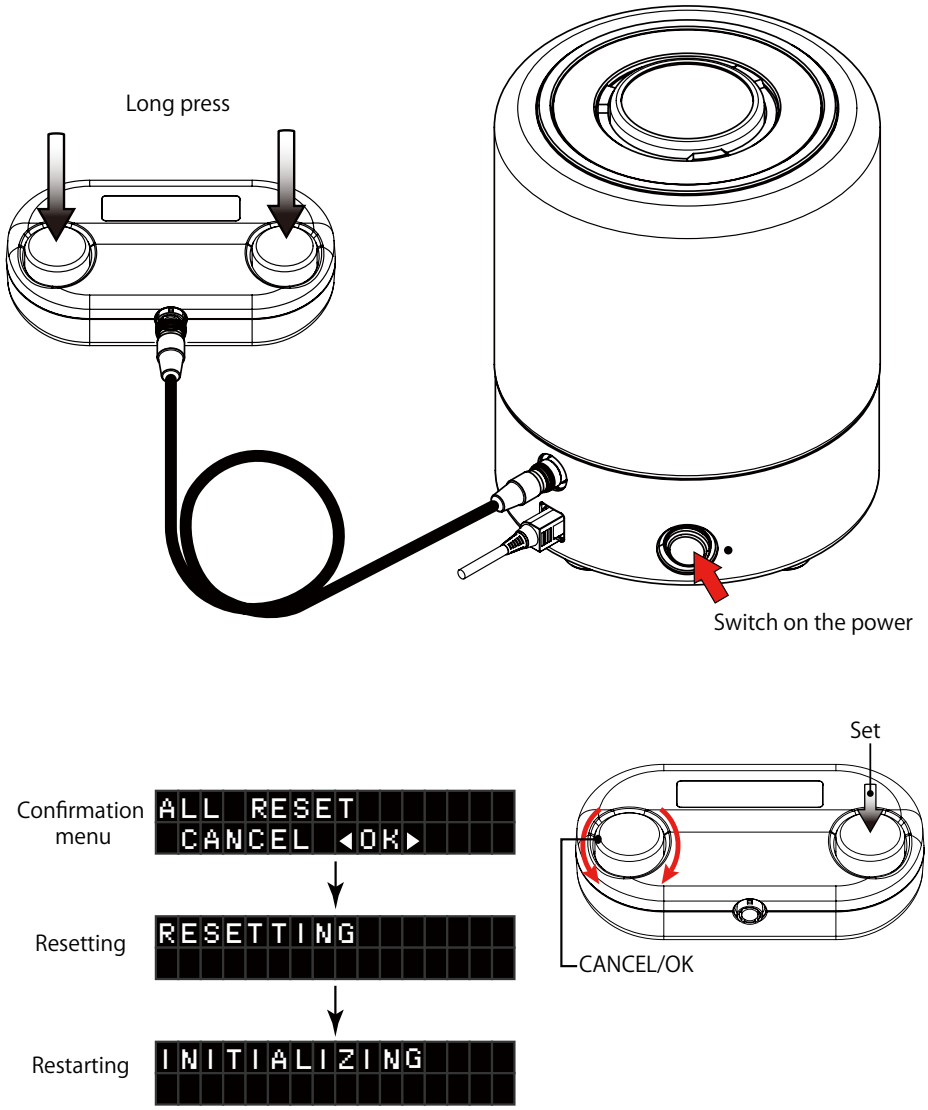

Figure: Resetting the device to factory settings

6 Care and storage

6 .1 Cleaning and Maintenance

To conduct maintenance works on the device, switch off the power, and unplug the AC adapter output cable.
Wide the device with dry soft cloth (glasses wiping etc). Do not use mops that are prone to static electricity, or tissue paper.
Do not use chemicals such as benzine, thinner, alcohol. It may break or damage the surface of the device.

Device maintenance is limited to cleaning and storage. Any repairs should be carried out only by the manufacturer engineers or qualified engineers.

6 .2 Storage

If you do not intend to use the device for a while, unplug the AC adapter output cable, and keep it is a dry and ventilated place.

6 .3 Replacing battery

When the internal clock shows wrong value, or timer not working properly, you need to replace the battery. This is button battery, its type is: CR 2032.

【Replacing procedure】

1. Switch off the power, unplug the AC adapter output cable.
2. Open the battery cover by removing the holding screw.

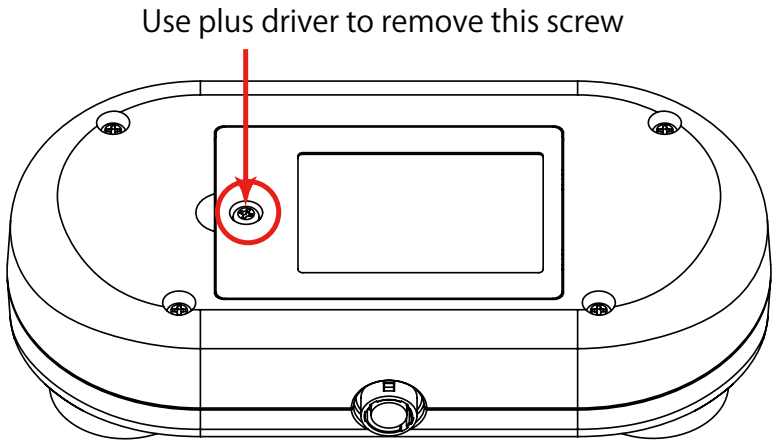

Figure: Removing the battery cover

3. After replacing the battery, put back the cover and tight the screw back

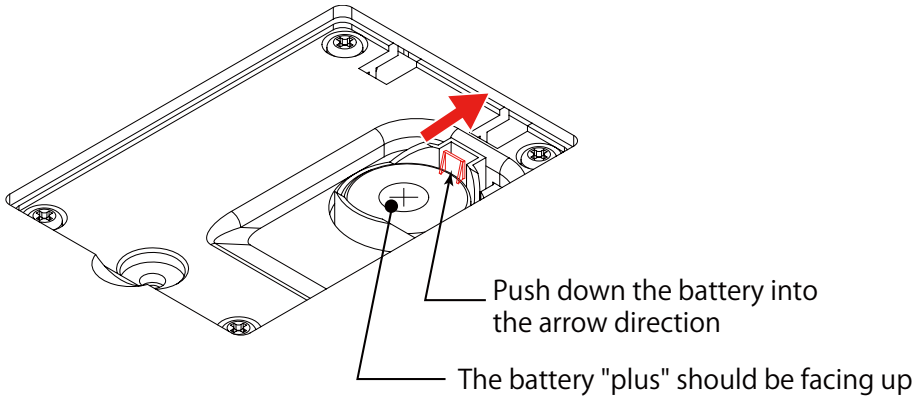

Figure: Removing the battery

4. Set the clock and your settings manually.

WARNING
hazardous waste

Note that the unit contain battery, refer to the Information on disposal section on disposal.

7 In case of trouble

Generally, in case of trouble, check the cables are firmly connected.

Try switching off the power, disconnect cables, connecting again, and switching on the power.

Do not connect or disconnect cables while power is on. This might damage the device.

7 .1 Main device trouble

- No power, or power fails down
  - Check the On button.
  - Check the cable.
  - Check the connector, no dirt or garbage is there.
  - Remove the power plug, and connect it again after 10 minutes.
- Irregular sound
  - This device has a motor, which normally cause sound when moving.
  - However, loud or irregular sounds could indicate problems with the motor or the mechanism or bad usage environment.
- Smell

  In case of burning smell, switch off the device immediately and unplug all cables.
- Extraordinary heat

  When used in high temperature environment, the device can get hot. It is advised to use the device in cool conditions. Constant high temperature usage might decrease the life span of the device.
- Unable to plug cable
  - Check the direction of the connector. Do not use force to insert the cables as this might permanently damage the cable or the connector.
  - Check dirt or garbage in the cable and connector.
- Unable to unplug cable
  - This device is made the cables cannot be unplugged simply by pulling them. Pulling cables with force will damage them. To unplug the cables, hold the cable cover with your fingers and slide it first, you will be then able to unplug the cable.
- INITIALIZING does not finish

  Normally it take less than a minute.

7 .2 Troubles with star projection

- No stars
  - Check lens cover.
  - Check focus, bright environment will prevent stars from being visible.
  - Choose a mode where stars are visible: STAR / AUTO / FAST. In case of AUTO / FAST modes, stars are not visible during noon time.
  - In case of STAR mode, make sure the brightness is not 0.
- Stars are flashing

  In some cases, on uneven surfaces, moving stars could look as if they are twinkling.
- Stars are dark
  - In STAR mode, check the brightness.
  - In AUTO / FAST modes, check the time. Time around sunrise and sunset has reduced star brightness.
  - Room lights could prevent the stars from being visible.
- Stars are not clear
  - Check the focus of the lens. In case of projection closer than 1m, you cannot adjust the focus. Increase the distance to the projection screen.
  - Check the lens, remove dust if any with soft cloth.
- Stars cannot move (no daily motion)
  - Check the controller, is it locked?
  - Time and stars are not matching
  - Check time zone. Location and longitude.
  - You can adjust the OFFSET value to match in case still there is an offset between the visible stars and the time.

  If nothing helps, try restoring factory settings.
- Stars look distorted

  As this is an optical device, some distortions occurs, especially near the horizon.

  Also depending on device placement, and surface features some distortion might be noticed.

7 .3 Lights troubles

- Lights does not function
  - Check the mode: One of these modes should be selected RELAX, CANDLE and COLOR.
- Light is flashing
  - In case of CANDLE mode, the device simulates the candle with variable brightness.
- Low brightness
  - Do not cover the device
  - Increase brightness of the lights

  In RELAX and COLOR modes, brightness can be adjusted manually.
- Wrong color
  - In AUTO mode, the color changes automatically depending on sun to simulate sunset and sunrise.
  - In CANDLE mode the color changes also automatically as candle fire.
- Cannot adjust color and brightness
  - Choose a mode where you can do these adjustments
  - In AUTO / FAST modes, light changes are made automatically, and you cannot change color and brightness values in these mode.

7 .4 Controller troubles

- Controller does not work, no response
  - Check the controller lock.
  - In case it is locked, press the right dial one time and unlock it.
  - Check the Bluetooth settings. It should not be set to on. If the Bluetooth is on, you cannot use the full functions of the controller.
- No display light
  - Check the display light duration setting. If this setting is on, the display light will automatically fade off after 30s or 60s as per settings.
- Current time is incorrect
  - Check the clock time. If wrong, set the clock time,
  - Check and set the time zone. In case of Japan, time zone is +09.00
  - In case clock gets wrong even after setting it, you should replace the controller batteries.

- TIMER does not function
  - Check that the main power of the main unit is switched on. In order to use TIMER, the device should be in standby state.
  - Check the clock time, and time zone.
- Error Message is displayed

  In case ERROR is shown on the display, this indicates an internal system error.

  Please indicate the error number and contact Ohira Tech.

7 .5 Bluetooth® troubles

- Does not connect to Bluetooth devices
  - Switch Bluetooth on.
  - Check Device name and pin code.
  - Use the application released by Ohira Tech MEGASTAR CLASS CONTROLLER.
  - Use the latest version.
  - Check your smartphone and OS versions on compatibility.
- Communication not stable
  - Check the distance and obstacles between the device and your smartphone.
  - Do not put the controller in metallic box and do not cover it with anything metallic.
  - Working distance at good signal is considered around 10m.
  - Forgot the pin code.
  - You can check the pin code of the device in Settings / Bluetooth
  - You can reset all settings to factory settings, and the default pin code will be: 12345678 , and device name: CLASS000.

7 .6 Misc

- The serial number is typed on the bottom of the device and controller.
    - If the device or the controller strongly fails down, even if no direct visible damage on the surface are noticed, an internal damage could happen to it.
- Device or controller are not water proof. If water gets to the device or its controller, please immediately switch down the power and unplug the AC adapter output cable.
- Do not replace parts or screws with non original parts. This might cause failure.
- Do not lose your warranty paper, as it will be needed for warranty support from Ohira Tech.

In case your problem was not solved, please contact us.

8 Information on disposal

Information on Disposal for Users of WEEE

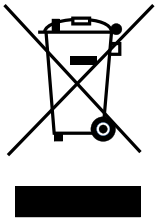

This symbol on the product(s) and / or accompanying documents means that used electrical and electronic equipment (WEEE) should not be mixed with general household waste. For proper treatment, recovery and recycling, please take this product(s) to designated collection points where it will be accepted free of charge.

Alternatively, in some countries, you may be able to return your products to your local retailer upon purchase of an equivalent new product. Disposing of this product correctly will help save valuable resources and prevent any potential negative effects on human health and the environment, which could otherwise arise from inappropriate waste handling.

Please contact your local authority for further details of your nearest designated collection point.

Penalties may be applicable for incorrect disposal of this waste, in accordance with your national legislation.

Instructions when disposing the product

- The battery must be removed from the appliance before it is scrapped.
- The appliance must be disconnected from the supply mains when removing the battery.
- The battery is to be disposed of safely.

OHIRA TECH LTD.

UE DECLARATION OF CONFORMITY (No.021_18_0)

We manufacturer: *OHIRA TECH LTD.*

Address: Via 4489-1 Ikonobecho, Tsuzukiku, Yokohama City, Kanagawa, 224-0053, Japan

declares that the object of the declaration is the product: Star Projector

Model: MEGASTAR CLASS

specific function: Star Projector

conforms to essential requirement according to ECC Directive EMC 2014/30/UE, LVD 2014/35/UE, ROHS 2011/65/UE, RED 2014/53/UE and Regulation CE No 1194/2012 Ecodesign applicable to this product. In addition, the object of the declaration described above, is in conformity with the relevant Union harmonization legislation:

EN 55015:2013+A1:2015, EN 61547:2009, EN 61000-3-3:2013, EN 61000-3-2:2014
EN 60598-1:2015, EN 60598-2-4:1997, EN 62493:2015,
EN 62471:2008, EN 62031:2008+A1:2013+A2:2015,
EN 61347-1:2008+A1:2011+A2:2013, EN 61347-2-13:2014
EN 60950-1:2006+A11:2009+A1:2010+A12:2011+A2:2013
EN 62479:2010, EN 301 489-1:2017, EN 301 489-17:2017,
EN 300 328:2017

This declaration of conformity is issued under the sole responsibility of the manufacturer.
Additional information:

Kanagawa, June. 07, 2021

Signed for and on behalf of: Takayuki Ohira , President

Takayuki Ohira

(Name, Title) (sign)

Contacts

Ohira Tech Ltd.
4489-1 Ikonobecho, Tsuzukiku, Yokohama City, Kanagawa, 224-0053, Japan
Tel +81-45-507-3531
Fax +81-45-507-3532
Email class@megastar.jp
Web https://www.megastar.jp/en

Ohira Tech Ltd.